Installation Instructions

Model Numbers
TUB / SHOWER ENCLOSURES
TE1400 / SE1400

Highlight Series
Frameless Bypass
Tub / Shower Enclosure

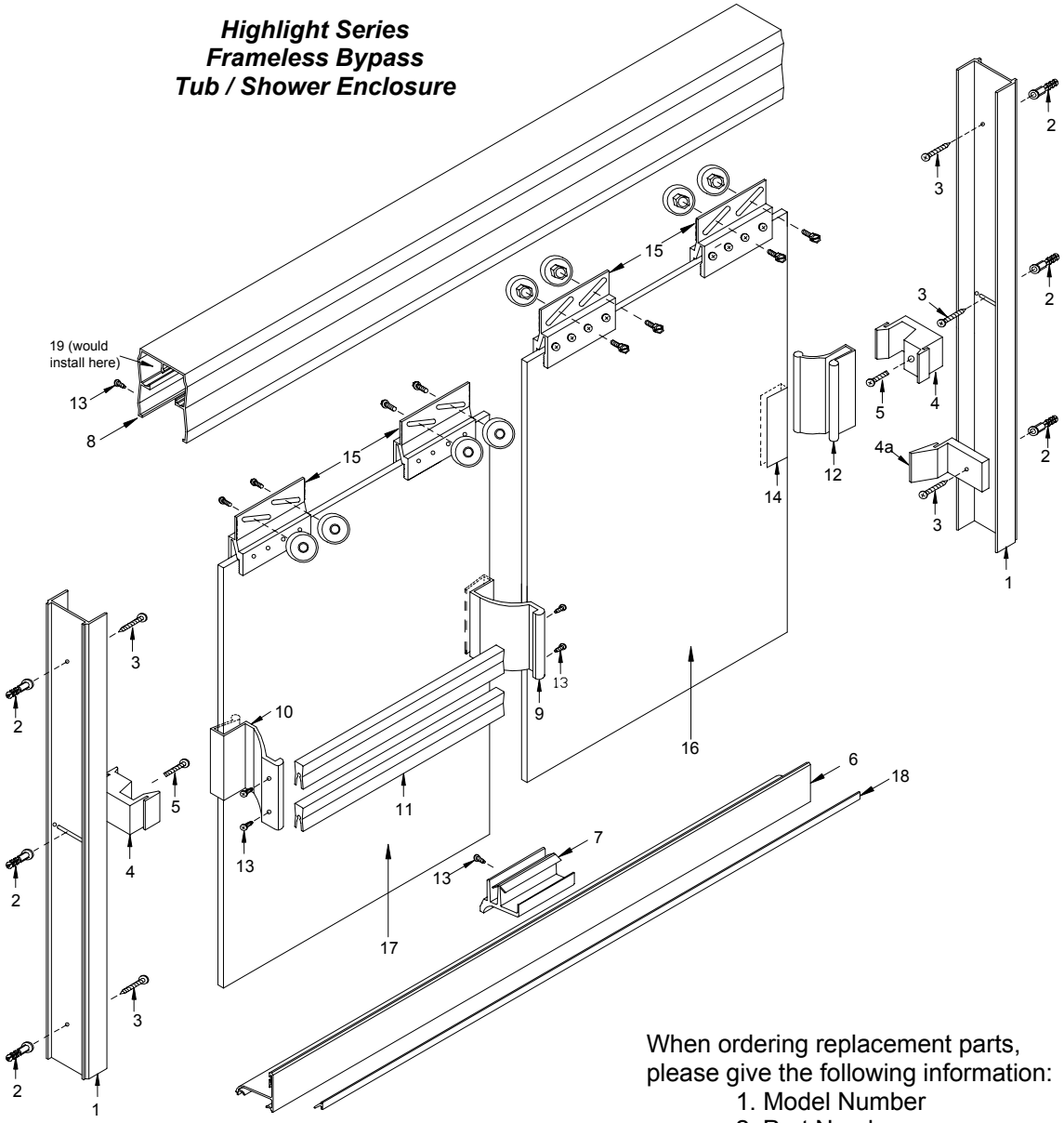

Description	Qty	Part #	Picture
1. Wall Jambs	2	ALCFM2997	
2. Wall Anchors	6	HWANCHOR	
3. #8x1 1/2" SMS Screws	6	#8 X 1 1/2" SMS	
4. Door Bumpers	2	VL924	
4a. Bottom Bumpers	1	VL926	
5. 6-32 x 1/2" MS	2	6-32 X 1/2" MS	
6. Bottom Sill (with V618)	1	ALCFM1802	
7. Center Guide - 3"	1	VL530	
8. Header	1	ALCFM2996	
9. Towel Bar Bracket	1	HWTE1206	
10. Towel Bar Bracket with Pull	1	HWTE1206P	
11. Towel Bars	2	ALCFM2995	
12. Inside Door Pull	1	HWTE1207	
13. 6-32x1/2 PH SMS	6	6-32x1/2 PH SMS	
14. Handle Vinyl	3	V916	
15. Double Roller Bracket Assm.-3”	4	AL1208F	
16. Inside 1/4" Glass Panel	1	Inside Slider 1/4"	
17. Outside 1/4" Glass Panel	1	Outside Slider 1/4"	
18. Door Guide Vinyl (with TE1522)	1	VL918	
19. Retainer Clip (Optional)	2	VL952	

When ordering replacement parts, please give the following information:

1. Model Number
2. Part Number
2. Part Description
3. Color

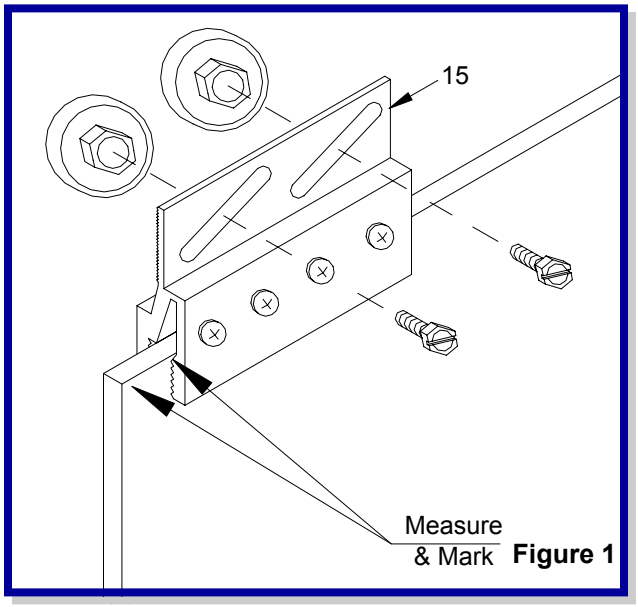

Figure 1

Step 1 – Unpack Materials

- Remove and verify all of the parts from the packaging.
- Check all parts for possible damage.
- You will need the following items to install this product:
  - -Pencil
  - -Silicone (GE1200-recommended)
  - -Masking Tape
  - -Level
  - -Tape Measure
  - -Hacksaw
  - -¼" Box End Wrench
  - -Phillips and Standard Screw Drivers
  - -Drill with 3/16" & #31 bits (Carbide tip for tile or 3/32" bit for fiberglass walls.)
  - -Rags
- Other helpful items:
  - -Torch Wrench
  - -Punch

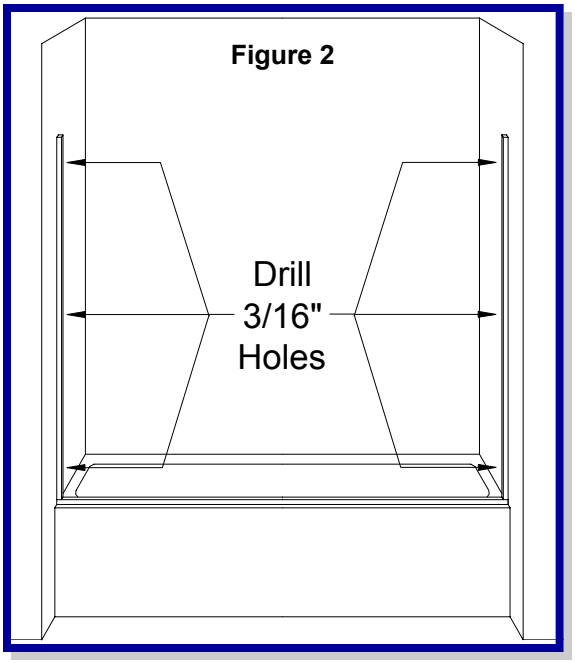

Figure 2

Step 2 – Install Roller Brackets

- Select the four roller brackets (You will either have a single or double bracket) (15) and the two pieces of door glass.
- Measure and mark the top of the glass 1" from both sides of each piece. ***(See Figure 1)***
- Apply a bead of silicone (GE 1200) into the open channel of roller brackets.
- Attach the brackets to the top of the panels, inside the measured mark.
- Secure the bracket by tightening the screws until the surface of the bracket is depressed 1/32" (28 inch pounds of torque).
- Clean off any excess silicone from around the bracket.
- **Allow this assembly to cure for 24 hours before hanging the doors.**

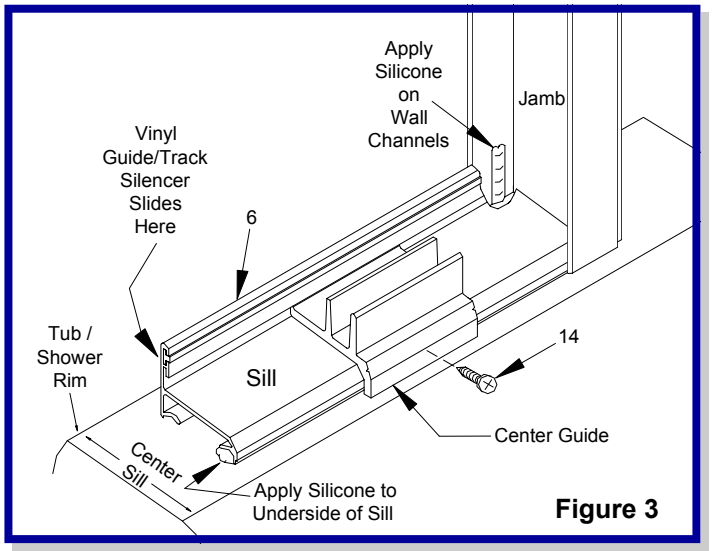

Figure 3

Step 3 – Prepare for Wall Jambs

- Measure, plumb, level and mark both sides of the tub/shower opening for the wall jambs (center the wall jamb with the bottom rim width of the opening, for proper sill placement later.) ***(See Figure 2)***
- Set the two wall jambs in place on opposite sides of the walls.
- Mark the walls through the holes in the jambs located on the top and bottom and the center of the horizontal slot. (Do not mark the two holes on either side of the center slot.)
- Remove the jambs and drill 3/16" diameter holes on the marks. (For tiled walls use a carbide tip bit. For fiberglass walls, use a standard 3/32" drill bit.)
- Insert wall anchors into holes. *(If you have drilled into a stud, skip this segment.)*

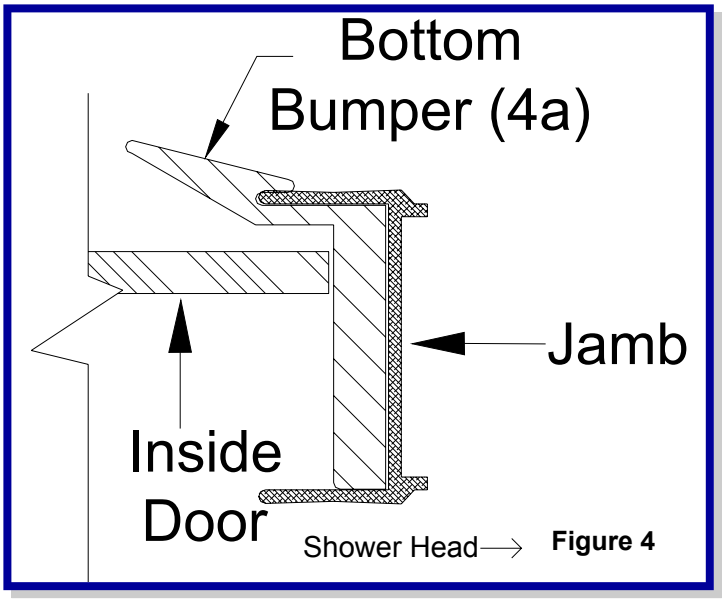

Figure 4

Step 4 – Install Wall Jambs

- Apply silicone where the wall meets the rim of the tub/ shower to seal the bottom of the jamb. ***(See Figure 3)***
- Set the faucet end wall jamb in place.
- Place the bottom bumper (4a) over the bottom hole on the jamb and secure with a #8 x 1 ½" (3) wall jamb screw. (The horizontal tab that sticks out into the door opening must be on the inside of the opening.) ***(See Figure 4)***
- Set the two remaining pre-drilled holes with the same type of screw in the jamb.
- Set the other jamb in place and secure to the wall with three #8 x 1 ½" screws (3).

(Note: It is important that the wall jambs are plumb. If the track does not fit flat, a slight bending of the track might be needed.)

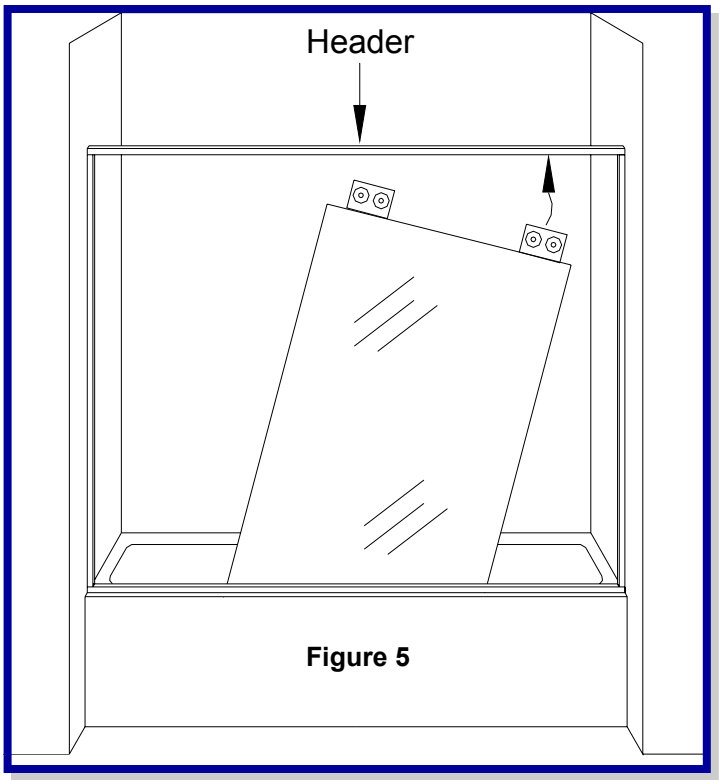

Figure 5

Step 5 Install Sill/Track

- Measure the wall to wall opening on the tub/shower rim between the jambs. ***(See Figure 2)***
- Cut the sill track (6). (Verify that the door guide vinyl strip (18) is installed in the sill. If the silencer is not in the sill, simply slide it into the slot located on the sill.) ***(See Figure 3)***
- Run a bead of silicone the full length of the underside of the sill and 1 ¼" up the inside leg of the jambs.
- Set the sill in place, press firmly to the rim of the tub/ shower.
- Clean off any excess silicone
- Apply tape to hold the sill in place until the silicone is set.

Step 6 - Install Header

- Measure the wall to wall opening above the wall jambs.
- Cut the header (8) 1/16" less than the opening ***(See Figure 5)***
- Place the header over the jambs.

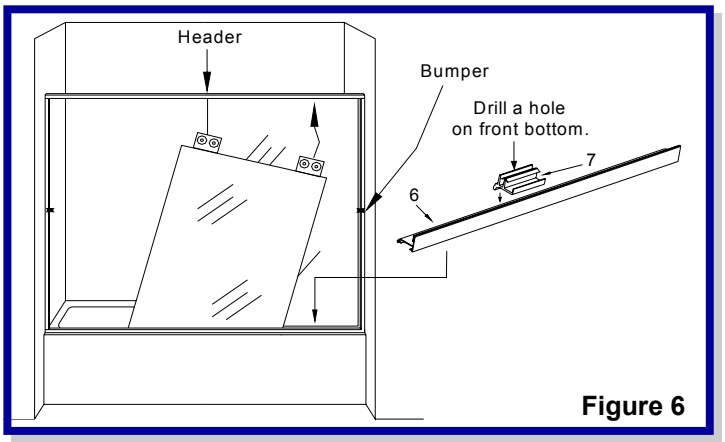

Figure 6

Step 7 – Install Doors

- Lift the inside door into the tub/shower and lift to the header.
- Insert one roller at an angle then raise the other side and insert that roller.
- This door will close against the faucet side.
- Lift the outside door glass and insert the bottom of the glass in front of the bottom of the inside door. ***(See Figure 5)***
- Lower the glass to clear the top of the door into the track.
- Lift up to the header and insert the rollers as you did on the inside piece.

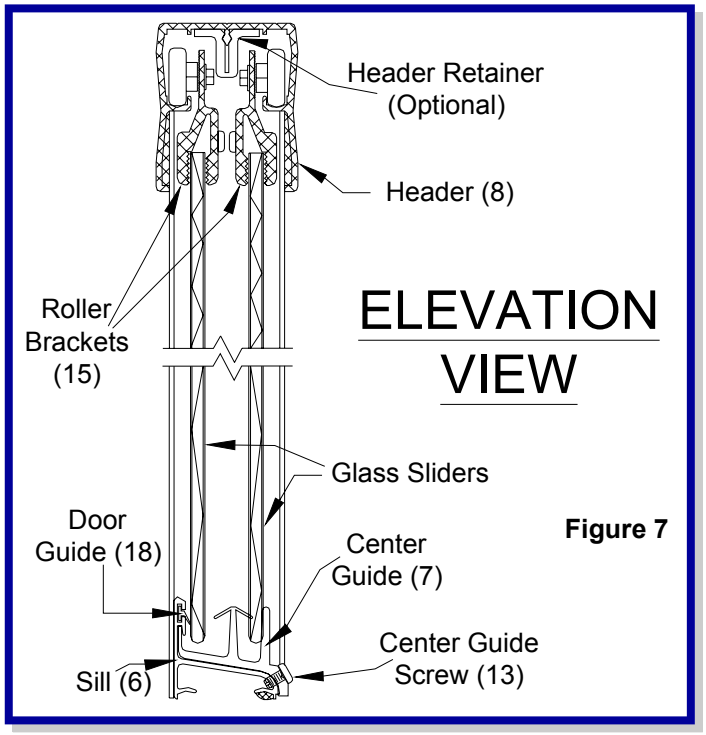

Figure 7

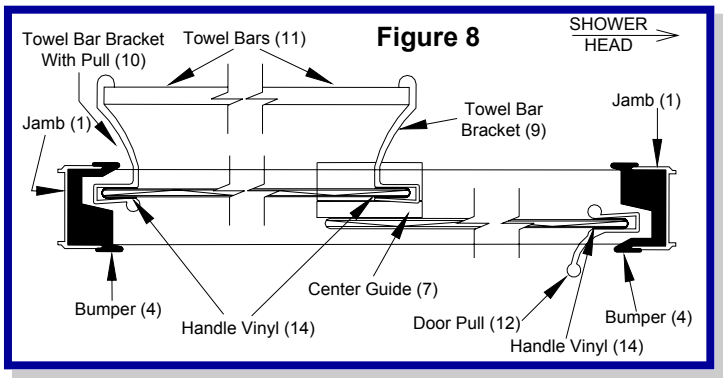

Figure 8

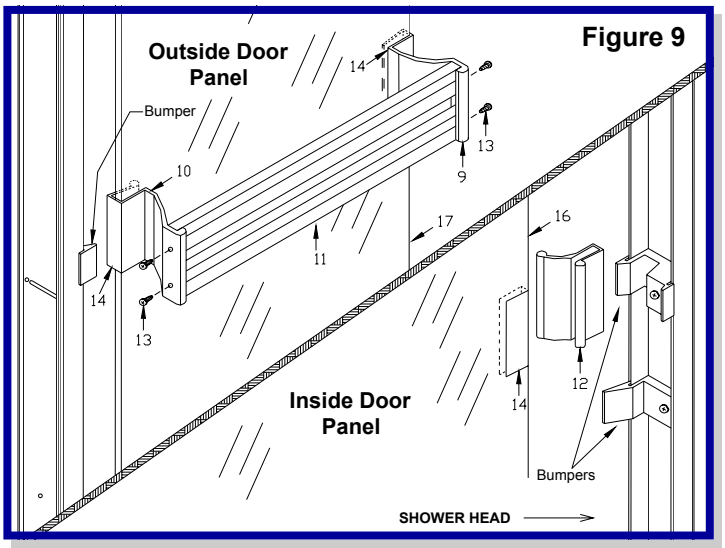

Figure 9

Step 7 *(Continued)* – Install Doors

- Close the panels and adjust the vertical edge of the panels with the jambs. Adjust the inside slider as low as possible to reduce the gap between the bottom of slider and sill without dragging on the track or center guide. (Adjust rollers by loosening the screw in the roller with a ¼" box-end wrench, without removing completely, adjust the panel by sliding the screw in the slot and re-tighten the screw.)
- *(Note: When screws are loose, support the panel so it does not fall & break.)*

Step 8- Install Center Guide

- Measure and locate the center of the sill. ***(See Figure 6)***
- Place the center track guide (7) on the sill. (Verify that the center guide is hooked into the slot position on the sill.) ***(See Figure 3)***
- Drill a hole in the front, at an downward angle using a #31 bit and secure the center guide to the sill with the #6 x 3/8" screw (13) ***(See Figures 3 & 7)***.

Step 9 – Secure Header

- From inside of the unit, drill a #31 hole at each end of the header and into the wall jamb. Secure with a #6 x 3/8" (13) SMS screw on the each end of the header.

Step 11 Install Bumpers

- Secure the 2 bumpers (4) with a 6-32 x ½" screw (5). (*Note: The recess of the bumper is toward the inside of the tub on the showerhead jamb, and toward the outside on the opposite jamb.)*

(See Figures 6 & 8)

Step 10 - Install Towel Bar

- Set handle vinyl (14) in place over edges of outside glass panel (17) with bottom of vinyl in line with bottom of bumper. ***(See Figure 9)***
- Tap towel bar brackets (9&10) in place over vinyl.
- Bracket (10) with pull should be to jamb side of slider opposite the shower head.
- Assemble towel bars (11) to brackets (9 & 10) using 4 #6x1/2" SM screws (13).
- Set handle vinyl (14) in place over edge of inside glass panel (16) at the shower head end, with bottom of vinyl in line with bottom of bumper. Tap inside door pull (12) in place over vinyl. ***Note: Larger portion of pull is on the inside of slider.***

Step 12 – Seal

- Apply silicone to the inside of tub/shower where jambs meet walls and sill meets rim of tub/shower.